SOLAR®
LIGHT

# USER MANUAL

## MODEL SL-3101 SP-METER™ SCOTOPIC / PHOTOPIC METER

Part Number: 210048
Revision Level: A

100 East Glenside Avenue • Glenside, PA 19038 • USA • P 1.215.517.8700 • F 1.215.517.8747
www.solarlight.com • info@solarlight.com • www.youtube.com/user/SolarLightColnc

US Patent Numbers 5,946,641 and 5,790,432 of simple meters.

ProComm is a registered trademark of Symantec Corporation.
Windows is a registered trademark of Microsoft Corporation.

Document No. D-IM-SL3101MAN-01-R00 Printed in the United States of America.

# TABLE OF CONTENTS


1 INTRODUCTION....4

1.1 SL-3101 Design Concept....4

1.2 Major Features....4

1.3 Currently Supported Detectors....4

2 QUICK START....5

2.1 Meter Operation....5

2.2 Displaying Calculated Values....5

2.3 Measuring With SL-3101....5

3 CONTROLS & INDICATORS....5

3.1 Display....5

3.2 Keypad....6

3.3 Audible Signals....6

3.4 Error Messages....7

4 SETUP....7

4.1 Meter Setup....7

4.1.1 Real Time Clock and Calendar: Function “T” and “D”

4.1.2 RS232 Data Printing: Function “O”

4.2 Sensor Setup....7

5 USING SL-3101 SP-METER™....8

5.1 What Is Scotopically Enhanced Lighting?....8

5.2 S/P Ratio....8

5.3 Visually Effective Lumens....8

5.4 Perceived Brightness....9

5.5 Displaying Calculated Values On The SL-3101....9

6 DATA MANAGEMENT....9

6.1 Data Logging....9

6.2 Data Processing....10

7 INTERFACES....11

7.1 Sensor Interface....11

7.2 Serial and Extension Port....11

7.3 Digital Control Lines....12

8 TECHNICAL SPECIFICATIONS....13

9 MAINTENANCE....14

9.1 Meter Calibration....14

10 TABLE OF FIGURES....14

11 INDEX....15

# 1 INTRODUCTION

## 1.1 SL-3101 DESIGN CONCEPT

The meter itself is programmed to perform the tasks common to most sensors. The information specific for a particular sensor is stored in a nonvolatile memory built into the sensor itself. It includes identification information, signal-processing algorithms, a description of the data presentation, and the current setup of the sensor.

Upon connection of a sensor the SL-3101 identifies it, downloads the contents of the sensor's memory into the operating memory, updates its setup and executes the downloaded code, if appropriate.

This approach allows for an unlimited number of sensors to be supported by the SL-3101. It configures itself to the specific features of each sensor and the custom setup of the measurement process.

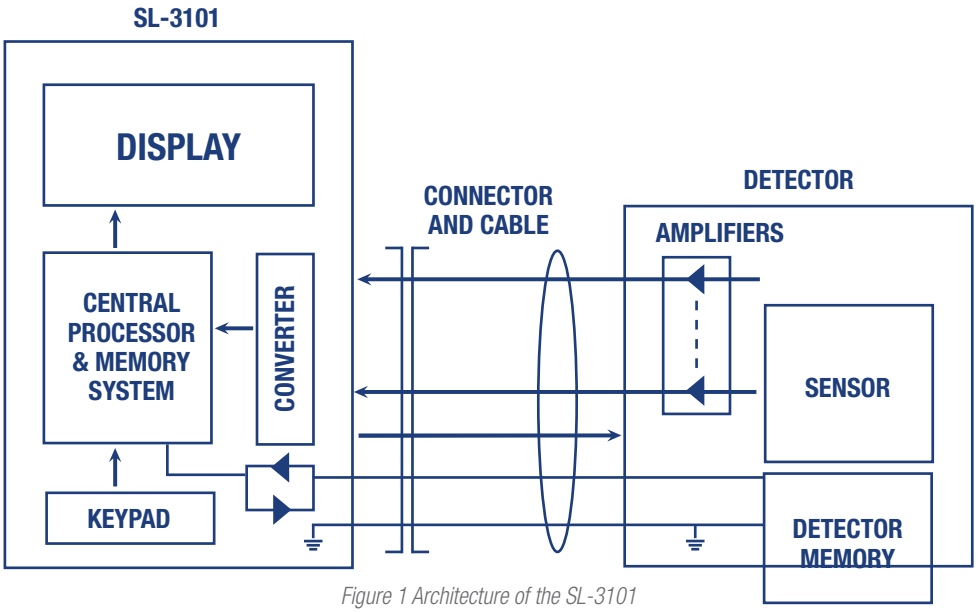


*Figure 1 Architecture of the SL-3101*

## 1.2 MAJOR FEATURES

Measuring with the SL-3101 is as simple as with the usual single sensor and meter. Plug a sensor into the input socket, turn ON power and read the display.

The many additional capabilities of the SL-3101 include:

- User selectable system of units
- Tracking of the Extremes of the Signal *(Min., Max., Avg.)*
- RS232 Serial Interface
- Digital Inputs and Outputs to Control External Devices

## 1.3 CURRENTLY SUPPORTED DETECTORS

The SL-3101 currently includes the following sensors:

- Photopic
- Scotopic

The SL-3101 can be used in any application where an accurate measurement is required, especially if multiple quantities are measured or the enhanced functionality of the meter is desired.

Potential applications include:

- Laboratory Measurements
- Outdoor Measurements

# 2 QUICK START

While sophisticated and powerful, the SL-3101 is a user-friendly instrument allowing for simple “plug-and-play” operation.

## 2.1 METER OPERATION

1. To operate the meter, simply connect the sensors.
2. Turn the meter on by pressing the **On/Off** key.
3. Zero out the readings by placing the sensors upside down on a flat opaque surface so the sensors are covered and not exposed to light. Read the display. If the readings are not zero or fluctuating around zero press the **Zero** key. This step can be skipped once you know the characterization of your sensors. If they always read zero then the step can be skipped.
4. Point the sensors at the desired source.
5. Read the meter.

## 2.2 DISPLAYING CALCULATED VALUES

Press the **Calc** key to display the Visual effective, Brightness and S/P Ratio calculated values. These values are in a continuous loop by pressing the **Calc** key.

To show both photopic and scotopic readings at the same time press the **Actual** key.

Pressing the **Units** key toggles the units from lux to foot candles (fc).

## 2.3 MEASURING WITH SL-3101

To perform measurements with a SL-3101 the following steps should be followed:

1. Power ON the SL-3101 by pressing the  button. If the meter does not respond attach the optional external power supply. The unit will be powered ON whenever connected to the external power supply. The SL-3101 will turn itself OFF after 3 minutes of inactivity if no sensor is attached.
2. Plug the selected sensor into the sensor input located on the side of the meter. The meter will indicate the connection by two beeps and the display will show the measurement result. Squeeze the locking arms of the sensor plug while connecting or disconnecting it.
3. In order to turn the SL-3101 OFF press the **On/Off** key. If the unit is connected to external power, it will remain powered up and pressing the **On/Off** will have no effect.

Refer to *“Controls and Indicators”* on page 11 for detailed description of the SL-3101 “data mode” display.

# 3 CONTROLS & INDICATORS

## 3.1 DISPLAY

When the meter is turned **ON**, it displays a start-up screen, Figure 2, while performing the hardware test. The software version number of the meter is briefly displayed.

Then, the display goes into the “data mode”. If a sensor is attached, the measurement results are shown in Figure 3. Otherwise the screen indicates that there is no sensor connected, Figure 4.

The **HOLD** function is activated by pressing the **HOLD** key. When the data is flashing, the contents of the display are frozen; however, the measurements or min/max/avg. (if enabled) will continue in the background. Pressing the **HOLD** key again reactivates the continuous data display.

The Low and High tracking can be initiated by pressing the **Min/Max** key. The same key clears the setting. The tracking of extremes starts from the moment the feature is activated. To re-start the tracking, turn the feature OFF then back ON by pressing the **Min/Max** key twice.

Averaging is activated by pressing the **Avg** key. The averaging starts from the moment the feature is activated. To re-start the averaging, turn the feature OFF then back ON by pressing the **Avg** key twice.

*Figure 2 Start-up Screen of the SL-3101 Meter*

*Figure 3 Display in the "Data Mode" with Sensor Connected*

*Figure 4 Display in the "Data Mode" with No Sensor Connected*

The instantaneous reading is displayed with the currently selected units to the right of the measurement result. If alternative units are available, pressing the **Units** key will convert the result to alternative units. They can be selected by pressing the **Units** repeatedly. After the last unit selection is reached, pressing the **Units** key will bring the display back to the initial unit selection.

Calculations can be initiated by successively pressing the **Calc** key. Press the **Calc** key and the **Visual Effectiveness** value is displayed on the screen. Press the **Calc** key again and the **Brightness** value is shown. Pressing the **Calc** key for a third time displays the **S/P** value. A fourth press will again display the **Visual Effectiveness**, and so on. While in **Calc** mode, pressing the **Actual** key will return to the actual Scotopic and Photopic values.

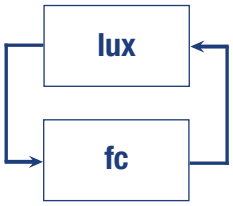


*Figure 5 Pressing the "Units" key converts the measurement result into one of the available unit systems.*

## 3.2 KEYPAD

The keys of the SL-3101, Figure 6, have a tactile feel and an audible signal is generated when the key is pressed.

The **On/Off** key toggles the power to the meter. It is only active in the display mode.

The **Actual** key displays the Scotopic and Photopic values. Pressing the **HOLD** key, freezes the information on the LCD, without affecting the measurement and data collection process. The displayed data will begin to flash. While in the "hold mode" pressing **HOLD** a second time reactivates display updating.

The **Min/Max** key initiates the Low and High tracking. The same key clears the setting. The tracking of extremes begins from the moment the feature is activated. To re-start the tracking turn the feature OFF then back ON by pressing the **Min/Max** key twice. High and low values will be reset to zero on restart of the **Min/Max** function.

The **Avg** key initiates averaging. The same key clears the setting. The averaging begins from the moment the feature is activated. To re-start the averaging turn the feature OFF then back ON by pressing the **Avg** key twice. The average value will be reset on restart of the **Avg** function.

The **Zero** key will zero any offset for the sensor. This function is also useful for relative measurements between two sources.

The **Set 100%** key is inactive on this model.

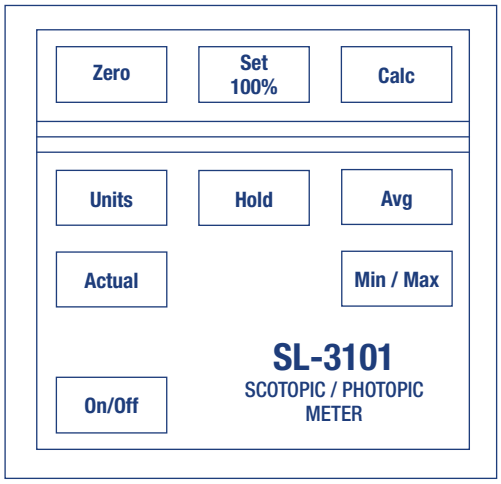


*Figure 6 Keypad configuration of the SL-3101*

## 3.3 AUDIBLE SIGNALS

Certain conditions cause a generation of an audible signal to attract the user's attention. The conditions generating an audible signal are listed in Table 1.

| TABLE 1 CONDITIONS CAUSING A GENERATION OF AN AUDIBLE SIGNAL. | |
|---|---|
| Power On | 1 Long Beep |
| Activation Of Any Key | 1 Short Beep |
| Acceptance Of A Newly Connected Detector | 2 Short Beep |
| Sensor Disconnected | 3 Short Beeps |
| Sensor Out Of Range (Max Value Exceeded) | Short Ticks |
| Error | 1 Long Beep |

## 3.4 ERROR MESSAGES

When an erroneous condition is detected by the SL-3101 an error message is displayed to indicate the nature of the problem.

| TABLE 2 ERROR CODES AND MESSAGES | | |
|---|---|---|
| **Code** | **Message On LCD** | **Description Of The Problem** |
| **02** | **Upgrade Software** | The sensor requires a higher version of the software controlling the SL- 3101. The message is displayed immediately after the new sensor is connected. Contact the manufacturer for upgrade. |
| **03** | **Out Of Calibration** | The sensor is due for calibration. The sensor should be returned to manufacturer for re-calibration. |

# 4 SETUP

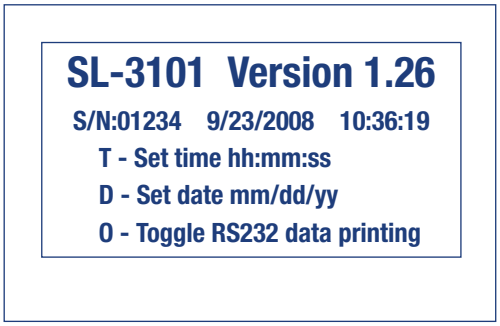


*Figure 7 Setup Screen for the SL-3101 Meter*

## 4.1 METER SETUP

### *4.1.1 REAL TIME CLOCK AND CALENDAR: FUNCTION "T" AND "D"*

The real time clock and calendar provides the information for time-stamping of the recorded data. To set the real time clock/calendar, follow these steps:

1. Connect the SL-3101 to an available serial port on a PC using an AT modem cable.
2. Start a communications program such as ProComm or Windows Terminal or HyperTerminal.
3. Configure the Com Port as follows:
   - Baud rate 19200
   - Handshake None
   - Data bits 8
   - Parity None
   - Stop bits 1
4. Press **Enter** to get a menu from the SL-3101. *(Figure)*
5. Press **"D"** to set the date or **"T"** to set the time.

### *4.1.2 RS232 DATA PRINTING: FUNCTION "O"*

The RS232 data printing function allows the user to display and/or capture the data from the sensor to a file via RS232. Follow steps 1-4 in the Real time clock and calendar section for the computer connection and display. Press **"O"** to toggle the data printing on and off. The data is updated and displayed about three times per second.

Open a file to capture the data if it is to be stored. Before the SL-3101 is connected a description can be annotated. For example, light source type, distance, filters, experiment name, etc. Connect the SL- 3101 and press **Enter**. Press **"O"** to toggle the RS232 on when the sensor setup is complete and you are ready to start storing data.

The data format displayed is shown in Table 3 and the description is shown in Table 5.

## 4.2 SENSOR SETUP

The sensors are equipped with a non-volatile memory to store configuration information specific to a particular sensor. When the sensor is connected, these configuration parameters are read from the sensor and used to set up the PMA.

# 5 USING SL-3101 SP-METER™

## 5.1 WHAT IS SCOTOPICALLY ENHANCED LIGHTING?

Scotopically enhanced lighting research suggests that certain lamps containing more blue in the spectrum will be more visually efficient than lamps with less scotopic content, even if they have the same (photopic) lumen and efficacy values. The use of scotopically enhanced lighting can therefore be used at lower energy levels while maintaining equal vision, or visual effectiveness.

The functioning factor used in scotopically enhanced lighting is called the S/P ratio, which evaluates the spectrum of any lamp on the basis of the Scotopic function in comparison to the Photopic function. This ratio is independent of lighting levels for fluorescent lamps, and can be provided by lamp manufacturers for any light source that they manufacture. For most fluorescent and HID lamps the S/P values vary between 0.8 and 2.5, with the higher values representing lamps with more blue in their spectrum.[i]

Human perception of light follows two distinct spectral response curves, depending on the light level. The spectral response curve that dominates during typical daytime conditions is the photopic response curve, and results from the "cones" in human eyes. During very low light conditions, perception follows the scotopic response curve, which in contrast results from the "rods" in the human eye. The **peak spectral luminous efficacy** of the scotopic response curve (1700 lumens per watt, at 507 nanometers) is significantly greater than that of the photopic response curve (683 lumens per watt, at 555 nanometers).[ii]

Traditionally, light levels have only been measured in accordance with the photopic response curve. In recent years however, interest has grown in scotopic light due to the human eye's ability to perceive objects more clearly from sources with enhanced scotopic quality, particularly at night.[iii]

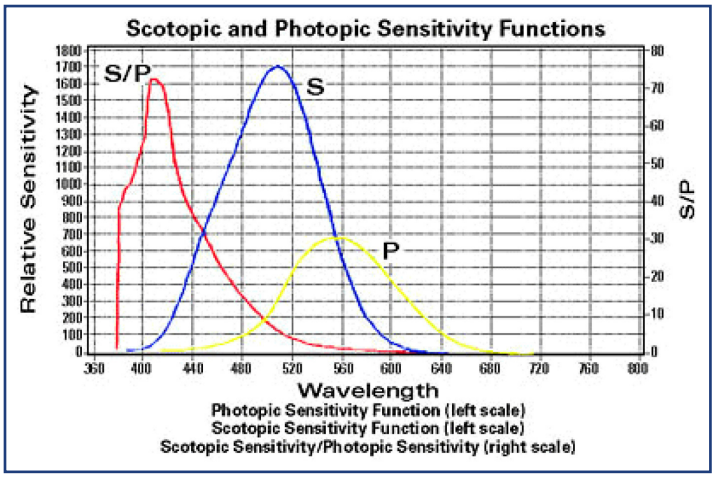


## 5.2 S/P RATIO

The factor S/P is the ratio of scotopic luminous quantity to photopic luminous quantity for the lamp spectral power distribution. From a given photopic quantity, the analogous scotopic quantity can be found by multiplying the photopic quantity by the value of the S/P ratio. Natural daylight has an S/P ratio of close to 2.5 which means that it is highly scotopically enriched.[iv]

If the surfaces of the lighted space have relatively neutral color, the S/P values of the environmental illumination will be approximately independent of viewing direction and will have the same value as the illuminating source. Conveniently, most sources used in the workplace have a fixed S/P value that is a property of the source just as is the correlated color temperature (CCT) or the color rendering index (CRI). Typical S/P values for most lamps range from 1 to 2.3, except for HPS and LPS lamps which have S/P values of 0.6 and 0.4 respectively. The incorporation of rod effects into lighting practice is then achieved with the conventional light meter coupled with additional factors that depend on the S/P value for the source under consideration.[2]

## 5.3 VISUALLY EFFECTIVE LUMENS

Light meters and photometric devices that measure light output are generally calibrated to the cone spectral sensitivity known as the photopic response. As a result, the light output of a lamp (lumens) is rated only in terms of its photopic content. Historically, the rod spectral sensitivity, known as the scotopic response, has generally not been considered relevant for interior lighting. However, many lighting professionals now believe that these photopic devices do not accurately reflect our perceptions of lit environments, and photopic lumens do not tell the whole story of a lamp's effectiveness.

To illustrate how ambient lighting applications depend on the S/P value, the following situations are considered.

### Application 1

Ambient lighting also provides task lighting, and Visual Performance is important. In this case, the lighting should be judged on the basis of achieving the clearest vision. Research has determined that the relevant photometric factor is the equivalent pupil luminance or illuminance which is given by the quantity

$$L_{ep} = [(S/P)^{0.78}],$$

where P is the photopic amount and the exponent (0.78) of the S/P value has been determined empirically in laboratory studies. Consider the comparison of two T8, 32-watt (W) readily available fluorescent lamps costing about the same and with the same color rendering index (CRI) of 85. For this example, lamp A would have a correlated color temperature (CCT) of 3500 kelvin (K), and 2950

initial rated (photopic) lumens. Lamp B would have CCT of 5000 K and 2800 initial rated (photopic) lumens. The choice of lamp is generally made on grounds of luminous efficacy, which favors lamp A. It is the visually effective lumens that should be compared, which means multiplying the photopic lumens by the factor (S/P)0.78.

Application 2

Task lighting is provided independently as in a computer environment; Visual Performance is important. Any ambient lighting will produce some glare effects on a computer screen as well as desaturation of screen colors. Unfortunately, computer work without any surround illumination will cause pupils to become dilated, resulting in poorer vision and possibly visual fatigue due to the additional accommodative response needed to focus when pupils are larger, so working in a dark room is not a good option. Thus the best compromise for the ambient lighting is to provide the smallest pupils with the least amount of glare. This means that the ambient lighting needs to be judged purely on the basis of its scotopic content, i.e., the relevant lighting quantity is S = P(S/P).

Example: Since a high value of CRI is less important in the computer environment, the comparison here is made between two T8, 32-W fluorescent lamps costing about the same and having the same CRI value of 75. Lamp A has a CCT of 3500 K, 2850 initial (photopic) lumens, S/P =1.3 Lamp B has a CCT of 6500K, 2700 initial (photopic) lumens, S/P = 2.15.

Conventional practice would lead to the selection of lamp A because of its higher efficacy. However, in the computer environment it is the scotopic lumens that should be considered, which for lamp A is 3705 and for lamp B is 5805. Lamp B operating at 64% of the power density of lamp A will provide the same amount of scotopic lumens. But because lamp B produces these scotopic lumens with fewer photopic lumens, lamp B will cause considerably less glare and desaturation.

**Visual Effectiveness Calculation:**

$$L_{ep} = [(S/P)^{0.78}],$$

Also described as Pupil Lumens

## 5.4 PERCEIVED BRIGHTNESS

One of the specially enabled functions of the Model SL-3101 SP-Meter™ Scotopic / Photopic Meter is the display of certain illumination calculation values that aid in the assessment of lighting as it pertains to the capability of the human eye. The following sources are the foundation of these measurements.

From *"The Re-Engineering of Lighting Photometry"* by Sam Berman:

Because deciding which illumination is brighter is a much simpler task than determining the brightness equality between two different illuminations and because of various other experimental requirements, the evaluation of the precise combination of photopic and Scotopic that determine the "brightness lumen" in full field view remains ongoing. However from the studies mentioned above a rough estimate can be made of where brightness equality would occur. This yields an expression how brightness depends on the combination of Photopic and Scotopic luminance namely $P(S/P)^{0.5}$. In terms of brightness perception this result suggests that 5000° CCT fluorescent lamps could operate with 14% less energy and achieve the same brightness perception as produced by CW lamps while the proposed lamp with the ratio S/P - 2.5 could operate at 30% lower energy while achieving the same brightness perception as CW illumination.[v]

**Brightness Figure Calculation:**

$$\text{Brightness} = P*(S/P)^{0.5}$$

## 5.5 DISPLAYING CALCULATED VALUES ON THE SL-3101

Press the **"Calc"** key to display the Visual Effectiveness, Brightness and S/P Ratio calculated values. The display will cycle through the set of values by pressing the **"Calc"** key.

To show both the Photopic and the Scotopic readings at the same time press the **"Actual"** key.

Pressing the **"Units"** key toggles the units from lux to foot-candles (fc).

# 6 DATA MANAGEMENT

## 6.1 DATA LOGGING

The SL-3101 does not have internal data logging capability. However, the SL-3101 can transmit data by RS232 serial interface. The SL-3101 can be connected to a PC running a communications software package. The PC can then function as a data logger saving data records to file. Refer to **"Setup"** on page 12 for instructions to use a PC to store data from the SL-3101. .

The data are downloaded in a text format following the template shown in Table 3.

| TABLE 3 FORMAT OF THE DATA DOWNLOADED FROM SL-3101 | | | | | | | | |
|---|---|---|---|---|---|---|---|---|
| Sensor Model # | Sensor Serial # | Record Date | Record Time | Recorded Value | Units | Scale | Flags | Calibration Due Date |

| TABLE 4 EXAMPLE OF DATA RECORDS FROM THE SL-3101 |
|---|
| RS232 printing Enabled. |
| 30,"02258","09/23/2008","09:47:00",2.3895E+03,"Lux",1.00,00,"09/2009" |
| 31,"02259","09/23/2008","09:47:01",2.4312E+03,"Lux",1.00,00,"09/2009" |
| RS232 printing Disabled. |

Commas separate the fields. The non-numerical values, such as serial number, date, time and units are enclosed in quotes to comply with a commonly used **Comma and Quote Separated Forma**t.

Table 5 contains detailed description of the individual fields of the data record. Refer to the **"Data Processing"** chapter below for additional information about importing and processing the data.

## 6.2 DATA PROCESSING

The data downloaded from the SL-3101 can be imported into any commercial spreadsheet or data processing package supporting the import of data in **Comma and Quote Separated Format**.

As an example, the steps necessary to import a data file into Microsoft Excel 2000 are listed:

1. Download the data from the SL-3101 and save in a file called PMA.TXT.
2. Open Microsoft Excel.
3. Place the cursor on an empty page in a cell where you want the data block to begin.
4. From the menu select Data, then Get External Data, and then Import Text File.
5. In the Import Text File dialog locate and select your data file. In this case PMA.TXT.
6. In the Import Text Wizard select Delimited for the Original File Type and click Next >.
7. Select Comma as the Delimiter and "as the Text Qualifier and click Finish.
8. Select the location where your data will be imported and click Ok.

The data is downloaded into the spreadsheet and can be manipulated with the various tools built into this software. Some programs have built-in import wizards that analyze the format of the file and facilitate the data import. A macro can be created in most spreadsheet programs to automate the import of downloaded data.

| TABLE 5 DESCRIPTION OF THE DATA RECORD FORMAT | | |
|---|---|---|
| **Field** | **Contents** | **Type** |
| Sensor Model # | The last two digits of the sensor type. For example the sensor PMA2131 has the type code 31 | Numerical |
| Sensor Serial # | The string containing the serial number of the sensor | Enclosed In "" |
| Record Date | The date stamp of the measurement. The date is formatted as follows: **mm/dd/yyyy**<br>where: **mm = month, dd = day, yyyy = year** | Enclosed In "" |
| Record Time | The time stamp of the measurement. The time is formatted as follows: **hh:mm:ss**<br>where: **hh = hours, mm = minutes, ss = seconds** | Enclosed In "" |
| Recorded Value | The measurement result | Numerical |
| Units | Units used for measurement result | Enclosed In "" |
| Scale | Scale of the sensor (1.00 nominal) *(future use only)* | |
| Flags | Flags set when data recorded *(future use only)* | |
| Calibration Due Date | The date the sensor is due for calibration. The date is formatted as follows: **mm/yyyy**<br>where: **mm = month, yyyy = year** | Enclosed In "" |

# 7 INTERFACES

## 7.1 SENSOR INTERFACE

The SL-3101 sensor interface provides connections for the sensor's analog signals, the power for the sensor and the digital interface for the sensor's memory.

The single SL-3101 sensor interface (port) provides 4 independent analog inputs, designated Input0 through Input3. These direct inputs accept signals in a range of -4V to +4V. Table 6 provides detailed functional description of the individual pins.

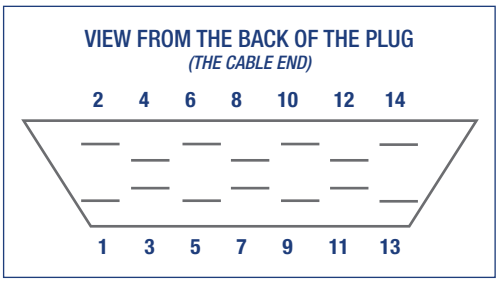


*Figure 8 Sensor input pin assignment.*

**TABLE 6 SL-3101 SENSOR INTERFACE CONFIGURATION**

| Pin Number | Signal Description | Specifications |
|---|---|---|
| 1 | Analog Input 1 or 5 | ±4V Full Scale, 2.7K Series 0.1uf to Ground |
| 2 | Analog Input 2 or 6 | ±4V Full Scale, 2.7K Series 0.1uf to Ground |
| 3 | Analog Input 3 or 7 | ±4V Full Scale, 2.7K Series 0.1uf to Ground |
| 4 | Analog Input 4 or 8 | ±4V Full Scale, 2.7K Series 0.1uf to Ground |
| 5 | Analog Ground | Internally Connected to Power/Digital Ground - ***Do Not Connect to Power GND Inside the Sensor*** |
| 6 | Sensor Presence 1 | Used to Determine if Sensor Connected |
| 7 | Sensor Presence 2 | Used to Determine if Sensor Connected |
| 8 | Sensor Decode 1 | Used to Determine Sensor Port Used |
| 9 | Sensor Clock | Clock for Non-Volatile Memory - ESD Protected |
| 10 | Sensor Decode 2 | Used to Determine Sensor Port Used |
| 11 | -5V Power | 50mA max., Short Circuit Protected |
| 12 | +5V Power | 50mA max., Short Circuit Protected |
| 13 | Power and Digital Ground *(connected to shield inside the SL-3101 meter)* | Do Not Connect to Analog GND Inside the Sensor |
| 14 | Data I/O | Data Line for Non-Volatile Memory - ESD Protected |
| Shield | Power and Digital Ground *(connected to pin 13 inside the SL-3101 meter) not connected to connector shell* | |

## 7.2 SERIAL AND EXTENSION PORT

The SL-3101 is equipped with a RS232C serial port allowing communication with a computer or a serial printer. The serial communication lines, along with other analog and digital signals, available on the 25 pin female D-connector located on the bottom of the meter.

To connect the SL-3101 to the IBM-PC compatible computer, a standard AT modem cable can be used in place of the one that is provided with the meter. The baud rate of the serial port is preset at 19200bps.

Due to the power-saving features built into the SL-3101, the serial port's transmitter operates properly only if there is no incoming transmission, i.e. the receiving line must be in a negative (marking) state. The SL-3101's receiver works properly all the time.

The SL-3101 can be controlled from a remote computer via an external modem. The modem connected to the SL-3101 should be set to auto-answer in order to pick-up the incoming calls automatically. The modem's result codes should also be disabled. For modems supporting the Hayes AT commands the following programming sequence is adequate:

A T&D0Q1E0S0=2&C1&W0&Y0

This sequence should be transmitted to the modem from a PC before this modem is connected to the SL-3101. Only the remote modem picking up the calls to the SL-3101 has to be set up in this way. The SL-3101 is not able to dial the telephone number so the calls cannot originate from the SL-3101. Table 8 shows the cable connections between the SL-3101 and the modem.

| TABLE 7 SERIAL COMMUNICATION & EXTENSION PORT CONNECTOR | | |
|---|---|---|
| **Pin Number** | **Signal Description** | **Specifications** |
| **1** | Optical Output 0 | Refer to Figure 8 |
| **2** | RxD - Data Input | Switching Threshold Approx. 1.5V, with 0.5V Hysteresis; Accepts Standard RS232C Levels |
| **3** | TxD - Data Output | High State: +5V<br>Low State: Equal to the RxD's Low Level |
| **4** | DCD - Data Carrier Detect Input | RS232C Levels |
| **5** | Optical Input 0 | Refer to Figure 9 |
| **6** | Optical Input 1 | Refer to Figure 9 *(Not Used for SL-3101)* |
| **7** | Ground | Digital Ground |
| **8** | Optical Input Ground | Refer to Figure 9 |
| **9** | +5V Power | 50mA Max., Short Circuit Protected |
| **10** | -5V Power | 50mA Max., Short Circuit Protected |
| **11** | Analog Input 3 | ±4V Full Scale, 2.7K Series 0.1uf to Ground |
| **12** | Analog Input 2 | ±4V Full Scale, 2.7K Series 0.1uf to Ground |
| **13** | Analog Input 0 | ±4V Full Scale, 2.7K Series 0.1uf to Ground |
| **14** | Optical Output 1 | Refer to Figure 8 *(Not Used for SL-3101)* |
| **15** | Analog Input 6 / Analog Output, Positive | ±4V Full Scale, 2.7K Series 0.1uf to Ground |
| **16** | Sensor Clock | Clock for Non-Volatile Memory - ESD Protected |
| **17** | Data I/O | Data Line for Non-Volatile Memory - ESD Protected |
| **18** | Sensor Presence 3 | Used to Determine if Sensor Connected |
| **19** | Analog Input 7 / Analog Output, Ground | ±4V Full Scale, 2.7K Series 0.1uf to Ground |
| **20** | Processor Selector | Not Used for SL-3101 |
| **21** | Analog Input 5 | ±4V Full Scale, 2.7K Series 0.1uf to Ground |
| **22** | Optical Output Ground | Refer to Figure 8 |
| **23** | Analog Input 4 | ±4V Full Scale, 2.7K Series 0.1uf to Ground |
| **24** | Analog Ground | Analog Ground |
| **25** | Analog Input 1 | ±4V Full Scale, 2.7K Series 0.1uf to Ground |

| TABLE 8 SL-3101 TO MODEM CONNECTION | | | |
|---|---|---|---|
| **PMA DB25 connector** | | **Modem DB25 connector** | |
| **Pin Number** | **Signal** | **Pin Number** | **Signal** |
| **2** | **RxD** | **3** | **TxD** |
| **3** | **TxD** | **2** | **RxD** |
| **7** | **GND** | **7** | **GND** |

## 7.3 DIGITAL CONTROL LINES

The digital control lines of the SL-3101 can be used to control an external device, such as a relay or valve, acting as a closed loop feedback system or as a dose controller. An example application is the monitoring and control of greenhouse temperature and the amount of light.

The SL-3101's digital control lines provide 1 optically coupled input and 1 optically coupled output designed to connect with control equipment. The pins of the digital control lines are available on the 25 pin connector, which also accommodates the pins of the serial port.

The optically coupled I/O's functions depend on the sensor connected to the SL-3101. Typically these outputs are not used although some custom or specialized sensors may use these ports for external control.

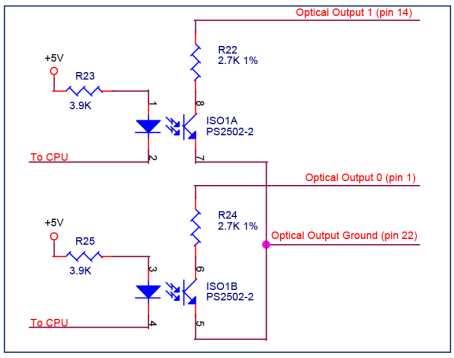


*Figure 9 Digital, Optically Coupled Outputs*

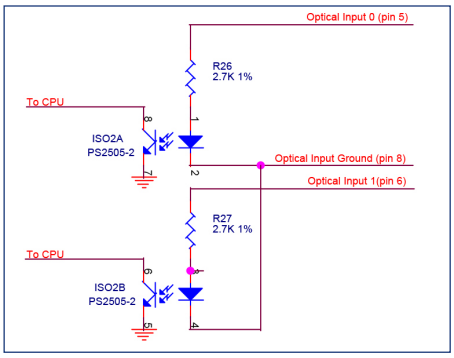


*Figure 10 Digital, Optically Coupled Inputs*

# 8 TECHNICAL SPECIFICATIONS

| SPECIFICATIONS | |
|---|---|
| **Sensor Inputs** | 1 Sensor Input with up to 4 Analog Signals |
| **Input Ranges** | ±4V, Single Range *(autoranging not necessary)* |
| **Resolution** | 3µV (±4V Range) |
| **Dynamic Range** | $2.6*10^6$ (6.5 Digits) |
| **Accuracy** | Within 0.2% FS |
| **Non-Linearity** | 0.003% Integral Non-Linearity |
| **Temperature Coefficient** | Max. 50 ppm/°C |
| **Sampling Rate** | 3 Per Second |
| **Screen Refresh Rate** | 10 Per Second |
| **Operating Temperature** | 0 to 50°C *(non-condensing)* |
| **Power Consumption** | Approx. 110 mW |
| **Batteries** | 4xAA Alkaline Batteries |
| **Battery Life** | >40 Hours Continuous Use |
| **External Power** | 9-12V AC or DC Adapter, 100mA Min |
| **Weight** | 18 oz (510 grams) |
| **Size** | 4"W x 7.6"H x 1.75"D (10 x 19.3 x 4.35 cm) |
| **LCD Size** | 2.5" x 0.5" (6.4 x 1.3 cm) |
| **User Interface** | 9-Button Keypad |

# 9 MAINTENANCE

## 9.1 METER CALIBRATION

Both the SL-3101 meter and the sensors have to be calibrated to assure accurate measurements.

The analog inputs of the SL-3101 are initially calibrated with an accuracy of 0.2% and the calibration factors are stored in its internal memory. The internal real time clock is accurate to within 1minute month. Since there are no mechanically adjustable components in the meter, its calibration is extremely stable. Nonetheless, the calibration should be periodically checked. The recommended calibration interval is one year. The calibration is done in a computerized tester and must be performed by Solar Light Company.

The calibration of the sensors is independent from the meter's calibration. The sensor calibration accuracy depends on the type of sensor. It should be performed at least annually. The calibration can be performed by Solar Light Company.

# 10 TABLE OF FIGURES


| FIGURE | DESCRIPTION | PAGE |
|---|---|---|
| **Figure 1** | Architecture of the SL-3101 | 4 |
| **Figure 2** | Start-up Screen of the SL-3101 Meter | 5 |
| **Figure 3** | Display in the "Data Mode" with Sensor Connected | 6 |
| **Figure 4** | Display in the "Data Mode" with No Sensor Connected | 6 |
| **Figure 5** | Pressing the "Units" Key Converts the Measurement Result into One of the Available Unit Systems | 6 |
| **Figure 6** | Keypad Configuration of the SL-3101 | 6 |
| **Figure 7** | Setup Screen for the SL-3101 Meter | 7 |
| **Figure 8** | Sensor Input Screen Assignment | 11 |
| **Figure 9** | Digital, Optically Coupled Outputs | 13 |
| **Figure 10** | Digital, Optically Coupled Inputs | 13 |

# 10 INDEX


Applications....4
**Audible Signals**....6
Averaging....5,6
Avg....4,5,6

**Calendar**....7
Calibration....7,14
**Clock**....7,11,12
**Controls**....5

**Data**
- Format....7
- Importing....10
- Logging....9
- **Management**....9
- Processing....10

Data Mode....5, 6,14
Sensor Interface....11
Sensors....4,5,13,14
- Connecting....5
- Selection....6
- Setup....7

Digital Control Lines....12
Dose....12

Function Keys....5,6

HOLD....5,6

**Importing Data**....10

Indicators....5
Interfaces....11

Keypad....6
- Avg....4,5,6
- Hold....5,6
- Min/Max....5,6
- ON/OFF....5,6
- Set 100.0%....6
- Units....5,6
- Zero....5,6

Maintenance....14
Min/Max
- Tracking....6

Modem Connection....12

ON/OFF....5,6

SL-3101
- Applications....4
- Design Concept....4
- Sensors....4,5,14
- Features....4
- Measuring With....5
- Setup....7

**Real Time Clock**....7,14

Serial Port....7
- Cable....7

Set 100%....6

Technical Specifications....13
**Time**....5,6,7,14
Tracking Min. and Max....6
Tracking Min/Max....6

Units....5,6

Zero....5,6


[i] Energy Conservation Using Scotopically Enhanced Fluorescent Lighting In an Office Environment by Office of Energy Efficiency & Renewable Energy - U.S. Department of Energy

[ii] "The Coming Revolution in Lighting Practice." Sam Berman, 2000

[iii] Demonstration Assessment of Light Emitting Diode (LED) Street Lighting by U.S Department of Energy and Pacific Gas & Electric Company in the City of Oakland CA.

[iv] Understanding The Difference Between Photopic And Scotopic Light. Energy & Environment Division, Lawrence Berkeley National Laboratory, University of California, Report No. LBL-36553, UC-1600, April 1995

[v] "The Re-Engineering of Lighting Photometry." S. Berman, Journal of the Illuminating Engineering Society.