SOLAR® LIGHT

Digital Sensors
Blue Light Sensor PMA2121

Measures Hazardous Blue Radiation in the Workplace in Accordance with ACGIH Guidelines

Solar Light's Model PMA2121 Digital Blue Light Safety Sensor indicates the effective irradiance weighted with the American Conference of Governmental Industrial Hygienists (ACGIH) Spectral Weighting Function for Blue Light Hazard. Employers, safety officers and risk managers can use this sensor to protect workers against the effects of excessive daily blue light exposure. Such exposure, according to numerous medical studies, can inflict permanent and irreversible damage to the eye, causing visual field defects and visual impairment. Light sources that may produce a blue light hazard include monochromatic and collimated lasers, collimated arc, and blue LEDs. To protect against retinal photochemical injury from chronic blue light exposure, the maximum exposure limit for a source subtending less than 0.011 radian should not exceed 10mJ/cm^2 per 10,000 seconds of exposure (or approximately 2 hours 47 minutes.) For exposure periods greater than 10,000 seconds, the weighted irradiance should not exceed 1μW/cm^2.

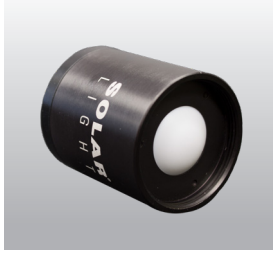

Applications

- Industrial and Laboratory Safety
- Printing
- UV Curing and Photolithography
- Lighting
- Safety Glass Testing
- Environmental Testing

Features and Benefits

- High Sensitivity
- Excellent Long-Term Stability
- Cosine Corrected
- NIST Traceable Calibration
- Ease of Use

Typical Blue Light Levels:

- 200W Halogen Lamp at 50 cm Distance – 70[μW/cm^2]
- 150W Xe Arc Lamp at 50 cm Distance – 600 [μW/cm^2]
- 40W Fluorescent Tube at 2m Distance – 5 [μW/cm^2]

100 East Glenside Avenue • Glenside, PA 19038 • USA • P 1.215.517.8700 • F 1.215.517.8747
www.solarlight.com • info@solarlight.com • www.youtube.com/user/SolarLightCoInc

CE Compliant

SOLAR® LIGHT

Digital Sensors
Blue Light Sensor PMA2121

Measures Hazardous Blue Radiation in the Workplace in Accordance with ACGIH Guidelines

Standard Chassis - IP60
1.8" (45.8mm) High x 1.6" (40.6mm) Diameter

Weatherproof Standard Chassis - IP68
Can be submersed up to 3 meters deep
1.8" (45.8mm) High x 1.6" (40.6mm) Diameter

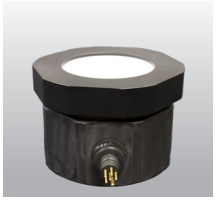

Waterproof Underwater Chassis - IP68
Can be submersed up to 100 meters deep
3.3" (83.4 mm) High x 4.7" (119.7 mm) Diameter

Options:

- Tripod Mounting Plate
- Weatherproof Chassis (submersible up to 3 meters)
- Waterproof Underwater Chassis (submersible up to 100 meters)
- Analog Model Also Available (Model PMA1121)

SPECIFICATIONS	
Spectral Response	Follows ACGIH blue hazard action spectrum, Figure 1
Cosine Response	±5% for Angles <40° (Standard Chassis)
Range	**See model chart on the next page*
Display Resolution	**See model chart on the next page*
Operating Environment	32 to 120°F (0 to +50°C)
Temperature Coefficient	Negligible
Cable Length	**See cable length chart below*
Dimensions and Weight	**See outline drawings*

REFERENCES

"Documentation of the threshold limit values for Physical Agents in the Work Environment" American Conference of Governmental Industrial Hygienists, Inc.
Sliney,D.H.,The Merits of an Envelope Action Spectrum for UVR Exposure Criteria, Am. Industr. Hyg. Assn. J..33 (9):644-653,1972

Part Number: 210011
Revision Level: C
Specifications subject to change without notice.

CABLE LENGTHS	
Standard Chassis	6ft Straight Cable (1.82m) *(Custom Lengths Available)*
Weatherproof Chassis	15ft Standard Cable (4.57m) *(Custom Lengths Available)*
Waterproof Underwater Chassis	Cable Length by Request. Specify up to 100 Meters.

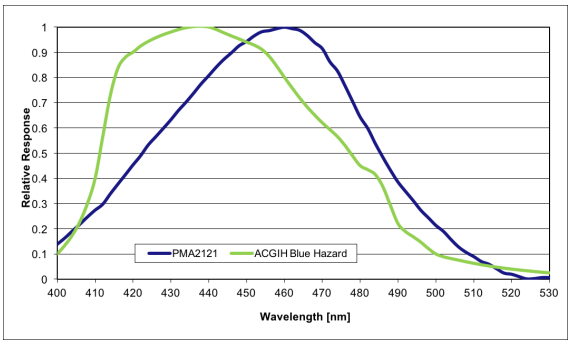

Fig. 1. Spectral Response

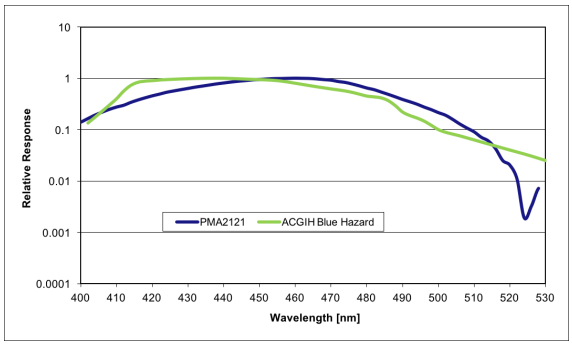

Fig. 2. Log Spectral Response

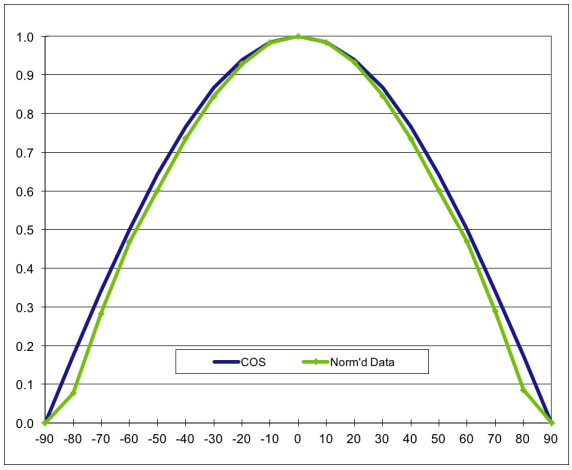

Fig. 3. Cosine Response

100 East Glenside Avenue • Glenside, PA 19038 • USA • P 1.215.517.8700 • F 1.215.517.8747
www.solarlight.com • info@solarlight.com • www.youtube.com/user/SolarLightCoInc

CE Compliant

Partial Model Selection Chart

STANDARD CHASSIS - IP60		
Model	**Range**	**Display Resolution**
PMA2121	2,000 [µW/cm²] or 20,000 [mW/m²]	0.01 [µW/cm²] or 0.1 [mW/m²]
PMA2121H	20,000 [µW/cm²] or 200,000 [mW/m²]	0.1 [µW/cm²] or 1 [mW/m²]

WEATHERPROOF CHASSIS - IP68		
Model	**Range**	**Display Resolution**
PMA2121-WP	2,000 [µW/cm²] or 20,000 [mW/m²]	0.01 [µW/cm²] or 0.1 [mW/m²]
PMA2121H-WP	20,000 [µW/cm²] or 200,000 [mW/m²]	0.1 [µW/cm²] or 1 [mW/m²]

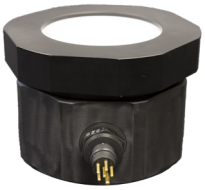

WATERPROOF UNDERWATER CHASSIS - IP68		
Model	**Range**	**Display Resolution**
PMA2121-UW	2,000 [µW/cm²] or 20,000 [mW/m²]	0.01 [µW/cm²] or 0.1 [mW/m²]
PMA2121H-UW	20,000 [µW/cm²] or 200,000 [mW/m²]	0.1 [µW/cm²] or 1 [mW/m²]

Custom ranges, cable lengths, and cable types are available upon request – please consult factory for details

Standard Chassis

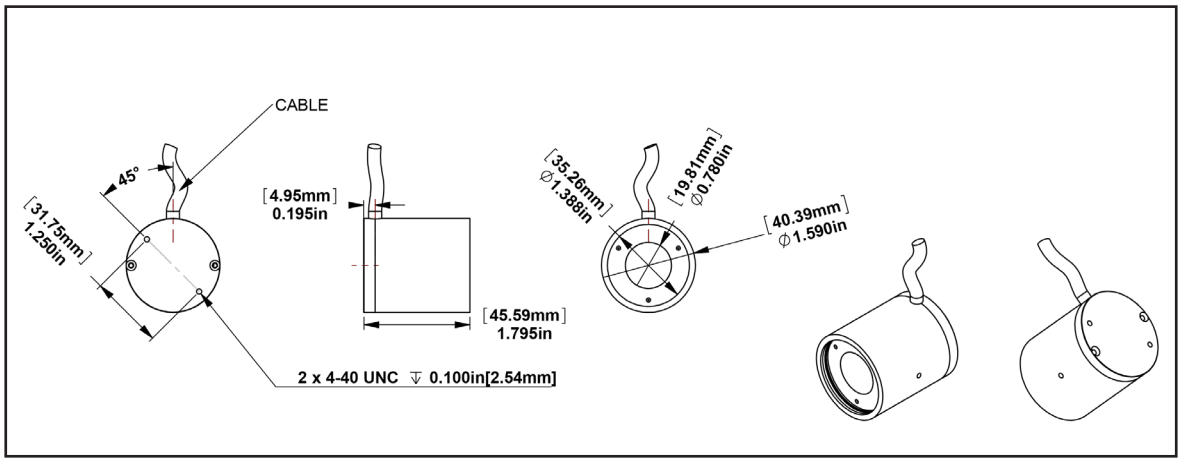

Est. Weight: 4 oz. (113 g)

Weatherproof Chassis

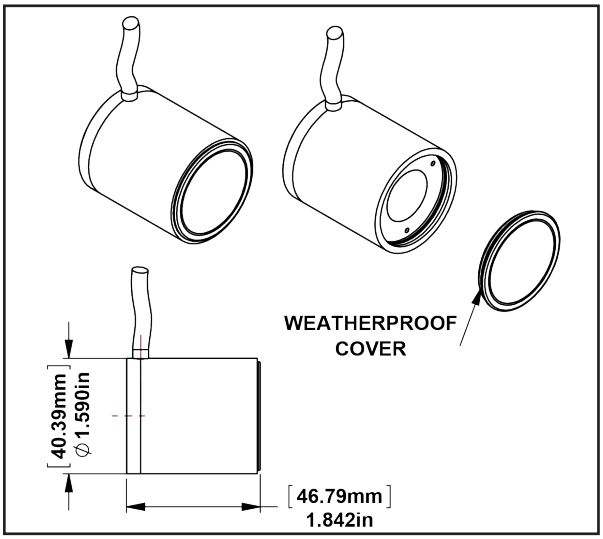

Est. Weight: 4.2 oz. (119 g)

Waterproof Underwater Chassis

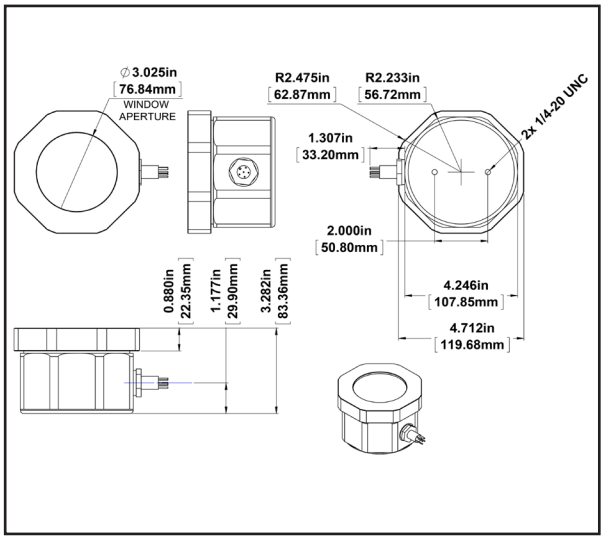

Est. Weight: 3.7 lbs. (1678 g)

SOLAR® LIGHT

Digital Sensors
Blue Light Sensor PMA2121

Measures Hazardous Blue Radiation in the Workplace in Accordance with ACGIH Guidelines

Since 1967, Solar Light Company, LLC has been recognized worldwide as America's premier manufacturer of Precision Solar Simulators and Light Sources, Light Measurement Instrumentation, UV Transmittance Analyzers, Meteorological Instrumentation, and Digital and Analog Sensors. Our advanced line of UV, visible, and IR radiometers and light meters measure laboratory, industrial, environmental, and health related light levels with NIST traceable accuracy. Column ozone, aerosol, and water vapor thickness measurements, in addition to long-term global ultraviolet radiation studies all over the world are performed using our atmospheric line of instrumentation. Solar Light also provides NIST traceable spectroradiometric analyses, calibrations for light meters and light sources, accelerated ultraviolet radiation degradation testing of materials, and OEM instrumentation and monitors. Please visit our website for more details, specifications, and pictures!

State Of The Art Solar Simulators available in 150-1000+ watt UV or AM variations for a variety of applications including PV Cell Testing, Materials Testing, Pre-Irradiation for *In Vitro* Broad Spectrum Sunscreen Testing, SPF Testing, and much more.

Multi-Functional Professional Grade Radiometers available with and without data logging, and compatible with over 130 Solar Light PMA-Series Sensors to measure UV, Visible and IR wavelengths. Specialty Meters also available to measure UV Radiation, SUV/UVA, Scotopic/ Photopic Spectra, and much more.

Advanced NIST-Traceable Sensors for accurate measurement of UVA, UVB, UVA+B, UVC, Visible, IR, Photostability, Temperature, and Custom Wavelength – well over 130 models in both digital and analog configurations, all compatible with our Radiometers.

Ultraviolet Transmittance Analyzers available as complete integrated turnkey systems to meet the latest ISO24443 requirements.

Handheld Ozonometers and Sunphotometers for fast and dependable Column Ozone, Aerosol, and Water Vapor Thickness measurements, in addition to long-term global ultraviolet radiation studies.

100 East Glenside Avenue • Glenside, PA 19038 • USA • P 1.215.517.8700 • F 1.215.517.8747
www.solarlight.com • info@solarlight.com • www.youtube.com/user/SolarLightColnc

CE Compliant